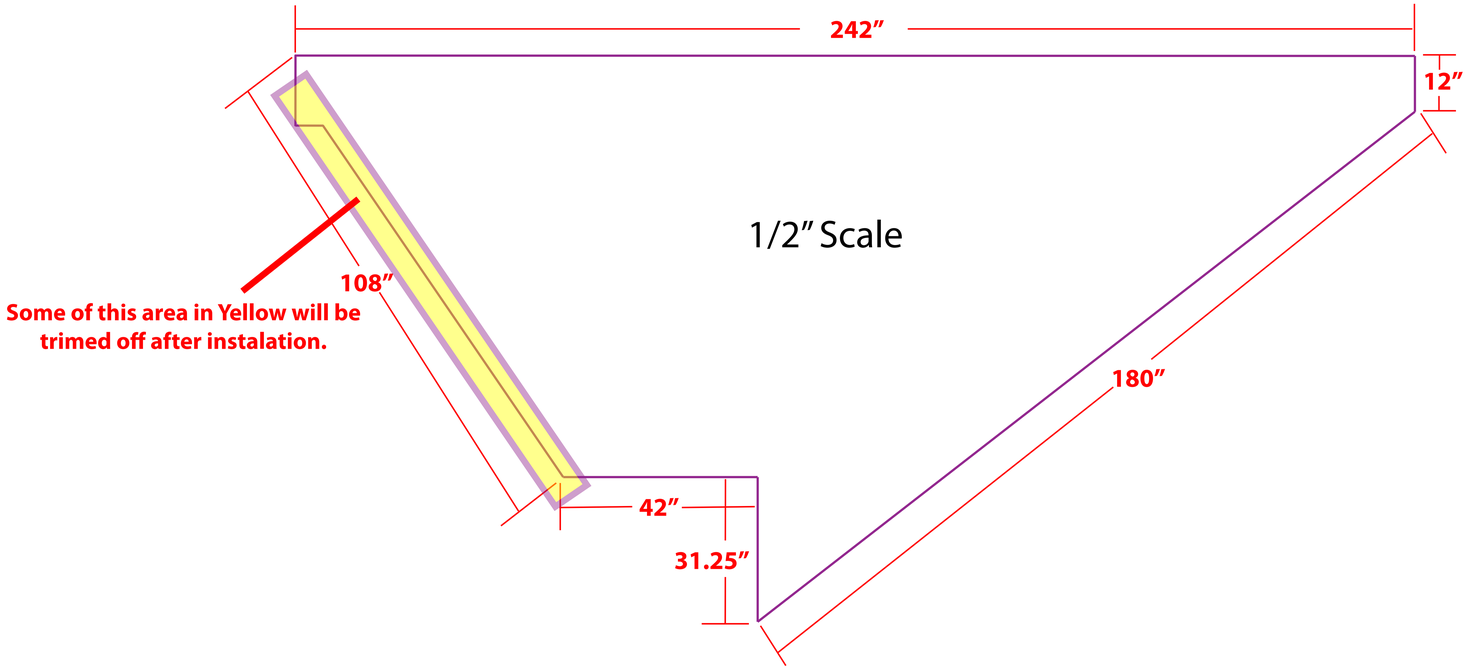
242″
12″
1/2″ Scale
108″
Some of this area in Yellow will be trimed off after instalation.
180″
42″
31.25″

A
B
C
D

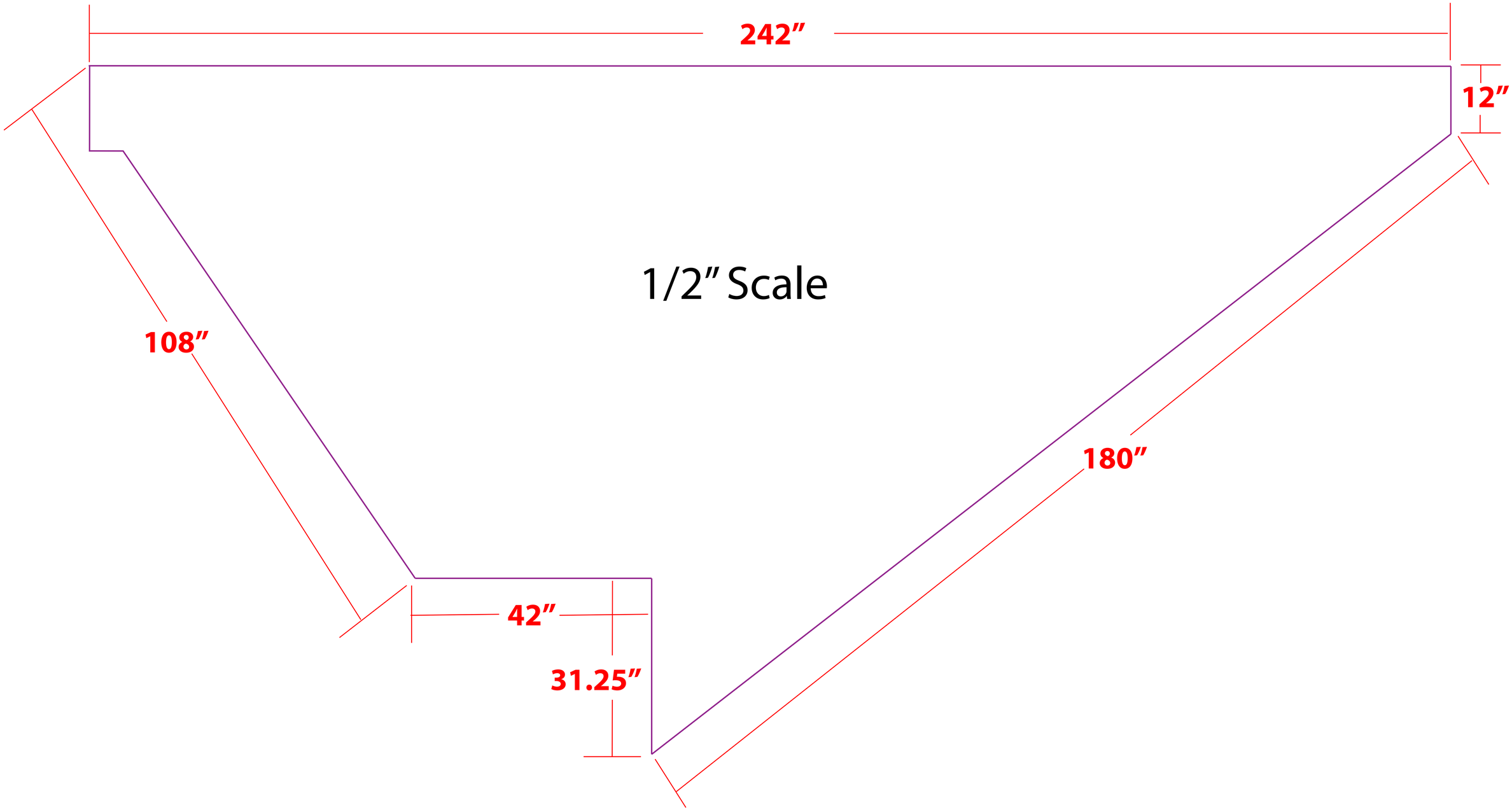
242″
12″
1/2″ Scale
108″
180″
42″
31.25″