Moscone Center San Francisco - Escalator Graphics 11A (South Lobby Level 1 to Hall)

Print Scale 10%

Please note: *Magenta lines indicate cut thru (2" of bleed is added to all sides), artwork will be trimmed to this line.*

Blue line indicates actual size of the glass. Escalator clings will be trimmed to fit the glass at showsite. ***TURN OFF FOR PRINT***

Green line indicates safe zone - keep all logos and text within this area ***TURN OFF FOR PRINT***

LEFT SIDE GLASS SURFACES

LC

LC - Glass size
689.8" x 27.2"

LC - Bleed size
696.7" x 31.3"

RIGHT SIDE GLASS SURFACES

RC

RC - Glass size
689.8" x 27.2"

RC - Bleed size
696.7" x 31.3"

RIGHT SIDE GLASS SURFACES

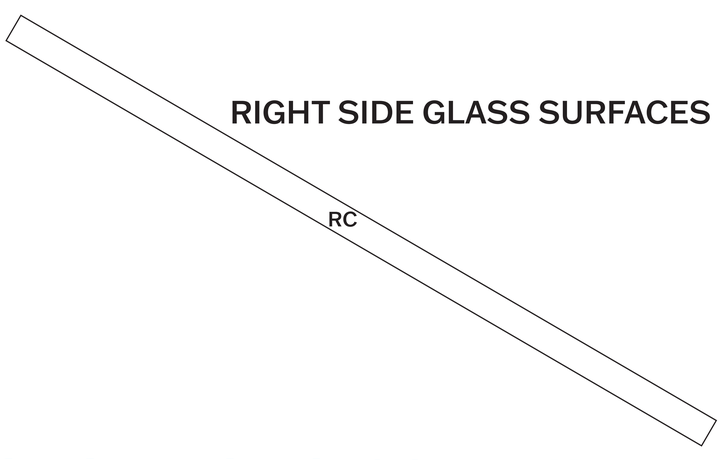

LEFT SIDE GLASS SURFACES

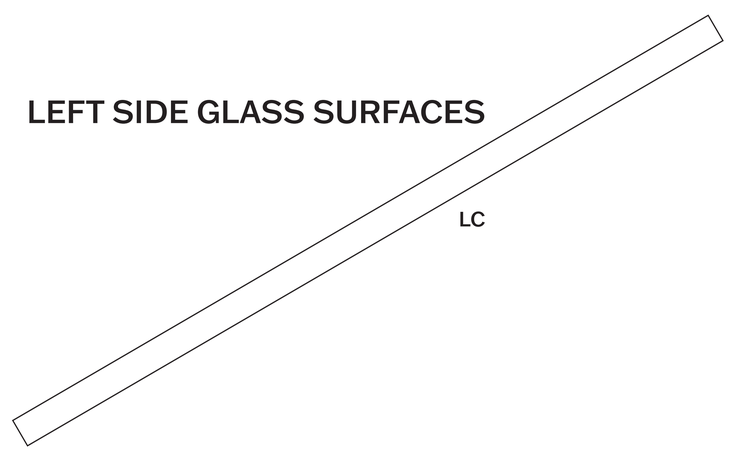

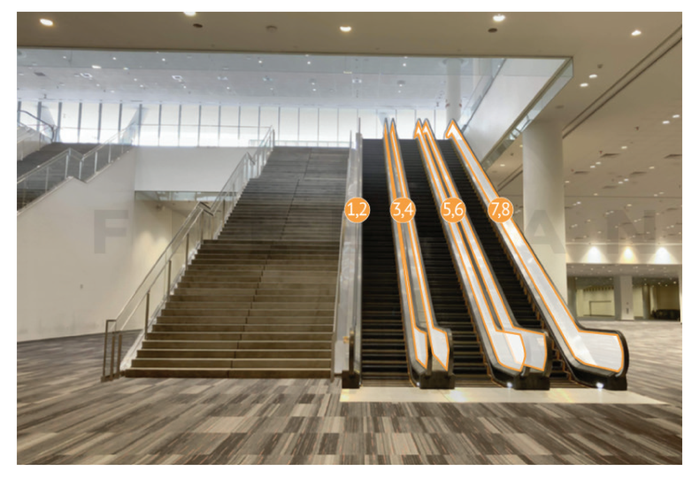

Template last updated: 1/7/2025 - JA