Moscone Center San Francisco - North Hall Exhibit Level - Escalator Graphics 525

Print Scale 10%

Please note: Magenta lines indicate cut thru (2" of bleed is added to all sides), artwork will be trimmed to this line.

Blue line indicates actual size of the glass. Escalator clings will be trimmed to fit the glass at showsite. ***TURN OFF FOR PRINT***

Green line indicates safe zone - keep all logos and text within this area ***TURN OFF FOR PRINT***

RIGHT SIDE GLASS SURFACES

RC - Glass size	RC - bleed size
713.6" x 26.5"	717.6" x 30.5"

LEFT SIDE GLASS SURFACES

LC - Glass size	LC - bleed size
713.6" x 26.5"	717.6" x 30.5"

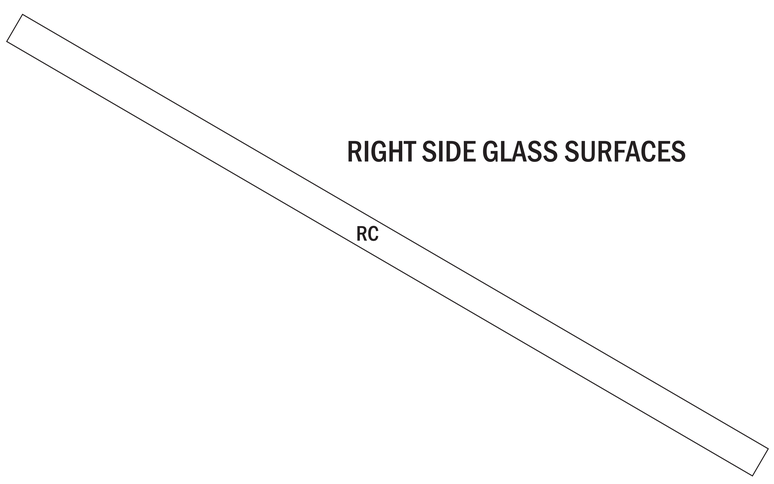

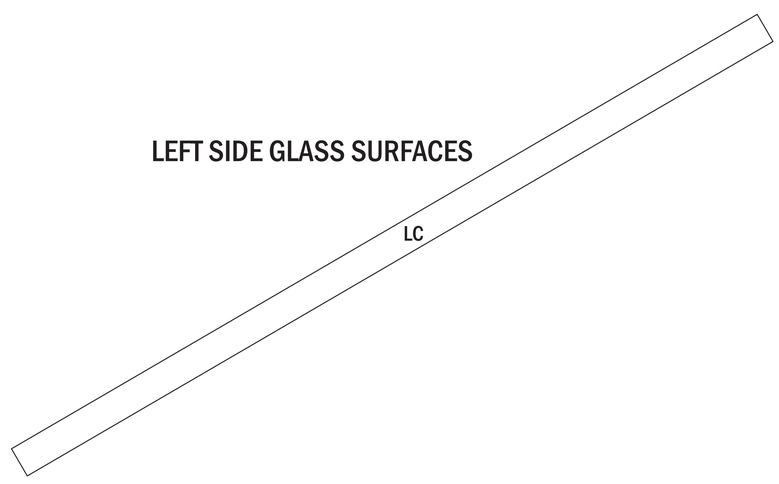

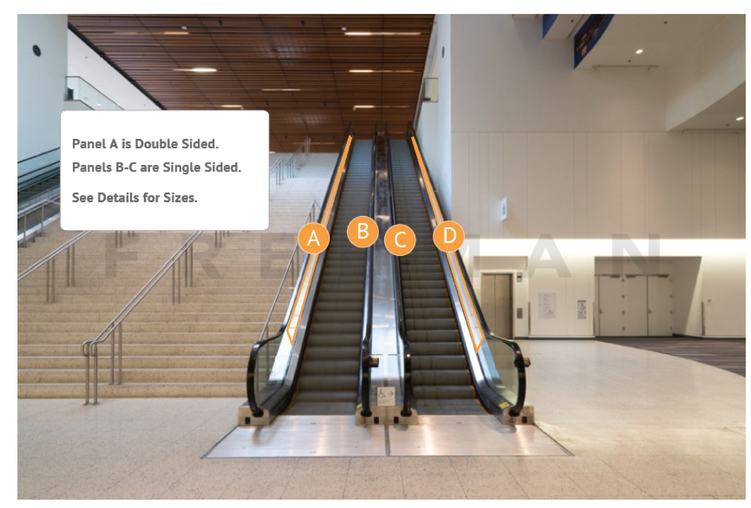

Template last updated: 4/27/2024